WAYLAND

HX SERIES

Engineered for data center liquid-cooling systems and sanitary food & beverage processing.

HX SERIES
High Performance Sanitary Butterfly Valves

Engineered Product Reference Guide.

www.WaylandIndustries.com 1-888-798-2653

WAYLAND

MANUAL BUTTERFLY VALVES (HX SERIES)

FEATURES:

- 100% hydrostatic tested / 100% inspected
- Field serviceable (no special tools required)
- Vacuum rating: 0.2 inches Hg at 68°F
- Low resistance to flow
- Bi-directional flow
- All wetted surfaces are ≤ $25R_a$
- Lockout handle on stainless trigger handle
- Flush bolting to ensure positive seal without over-compression (1/2″ – 4″)
- Separate bolt holes for quick actuator mounting without disassembling valve or removing body bolts
- Opposing body bolt design prevents loosening from vibration or cycling, delivering long-term joint stability and positive sealing performance
- Stem design features a Double-D design on ½"–3" sizes for smooth operation and a square profile on 4"–6" for increased torque requirements
- Lightweight body design to reduce stress on line
- FDA approved seats designed with increased hardness for high-cycle automated applications
- Thicker disc and stem designed for max pressure applications

OPTIONS:

- **Material**: 304 or 316L forged stainless steel body and disc
- **Seat**:
  - » EPDM (standard)
  - » Silicone
  - » FKM
  - » All seats are FDA approved
- **Handle**:
  - » 12-position stainless steel trigger handle
  - » 12-position black plastic trigger handle
  - » 4-position pull handle
  - » Manual hand wheel gear operator
- **Connection**:
  - » Stocked in clamp and buttweld ends
  - » Other connections available upon request

HX SERIES BUTTERFLY VALVE SPECIFICATIONS

Information below based on water media at 68°F/20°C

SIZE	TORQUE (in. lbs.) *	PRESSURE RATING (PSI)	FLOW COEFFICIENT (C_V)	WEIGHT (lbs.)			
				VALVE**	STEEL TRIGGER	PLASTIC TRIGGER	PULL HANDLE
1/2"	90	150	1.77	1.74			
3/4"	90	150	1.77	1.72			
1"	90	150	2.73	2.33			
1-1/2"	90	150	2.19	1.94	1.08	0.53.	0.81
2"	120	150	3.73	3.24			
2-1/2"	140	150	4.28	3.54			
3"	180	150	5.39	4.49			
4"	270	150	7.58	6.54	1.29	0.53	0.83
6"	620	150	15.26	18.52	1.98	N/A	2.83

* Torque values listed are based on FKM material. EPDM and Silicone torque values are lower than FKM.
** Valve weight without handles

WAYLAND

MANUAL BUTTERFLY VALVES (HX SERIES)

Operating Pressure - Temperature Rating

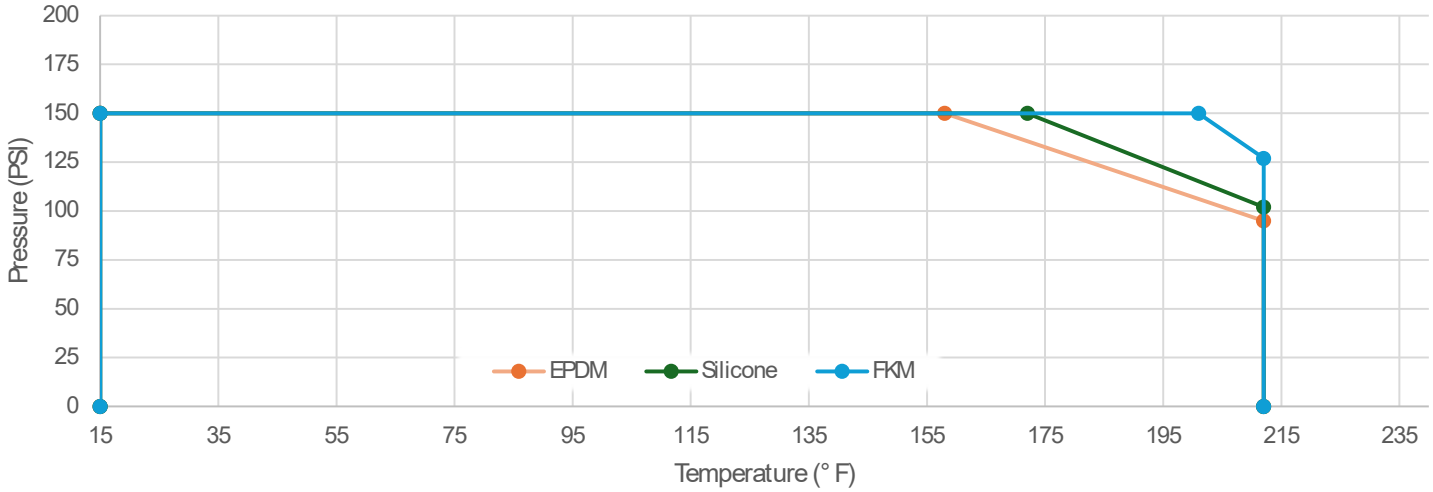

Temperature Rating

SEAT MATERIAL	OPERATING TEMPERATURE	MAX- SHORT DURATION STERILIZATION TEMPERATURE
EPDM	15° F ~ 212° F (-10°C ~ 100° C)	266° F (130° C)
FKM		266° F (130° C)
SILICONE		284° F (140° C)

HOW TO ORDER

W +	Alloy	+	Product Code	+	Ends	-	Seat	-	Size (in.)	-	Handle
	4 = 304 6 = 316L		BFVHX=HX Series Butterfly Valve		TC = Tri-Clamp BW = Buttweld		E=EPDM S=Silicone V=FKM		.50 .75 1 1.5 2 3 4 6		TS=Stainless Steel Trigger TP=Plastic Trigger PH=Pull Handle SRO= Spring Return Open SRC= Spring Return Closed DA = Double Acting

Example: W + 6 + BFVHX + TC - E - 3 - TS

(W6BFVHXTC-E-3-TS)

DIMENSIONS (inches)

HX BUTTERFLY VALVE CLAMP ENDS

SIZE	A	B	C	L	L1	L2	L3	H1	H2	H3	W
1/2"	0.37	0.80	0.99	2.68	6.26	6.26	5.71	3.30	3.30	3.20	3.11
3/4"	0.62	0.80	0.99	2.68	6.26	6.26	5.71	3.30	3.30	3.20	3.11
1"	0.87	1.72	1.99	2.60	6.26	6.26	5.71	3.30	3.30	3.20	3.11
1-1/2"	1.37	1.72	1.99	2.60	6.26	6.26	5.71	3.42	3.42	3.31	3.35
2"	1.87	2.22	2.52	2.76	6.26	6.26	5.71	3.81	3.81	3.71	4.13
2-1/2"	2.37	2.78	3.05	2.76	6.26	6.26	5.71	3.95	3.95	3.85	4.41
3"	2.87	3.28	3.58	3.00	6.26	6.26	5.71	4.21	4.21	4.10	4.92
4"	3.83	4.34	4.69	3.00	6.26	6.26	6.89	4.84	4.84	4.73	6.18
6"	5.78	6.18	6.57	5.52	6.26	6.26	8.37	6.02	6.02	6.33	8.52

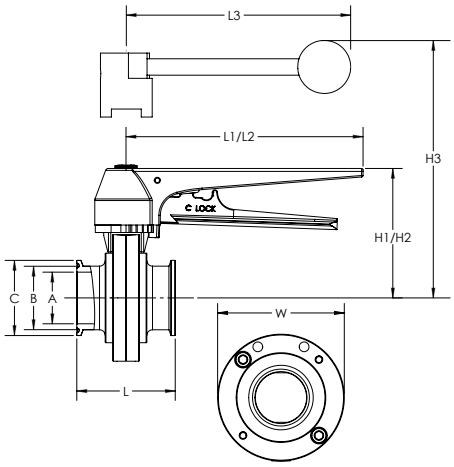

HX BUTTERFLY VALVE BUTTWELD ENDS

SIZE	A	B	C	L	L1	L2	L3	H1	H2	H3	W
1/2"	0.37	0.50	0.71	2.68	6.26	6.26	5.71	3.30	3.30	3.20	3.11
3/4"	0.62	0.75	0.71	2.68	6.26	6.26	5.71	3.30	3.30	3.20	3.11
1"	0.87	1.00	0.71	2.68	6.26	6.26	5.71	3.30	3.30	3.20	3.11
1-1/2"	1.37	1.50	0.71	3.00	6.26	6.26	5.71	3.42	3.42	3.31	3.35
2"	1.87	2.00	0.71	3.14	6.26	6.26	5.71	3.81	3.81	3.71	4.13
2-1/2"	2.37	2.50	0.71	3.14	6.26	6.26	5.71	3.95	3.95	3.85	4.41
3"	2.87	3.00	0.71	3.22	6.26	6.26	5.71	4.21	4.21	4.10	4.92
4"	3.83	4.00	0.83	3.46	6.26	6.26	6.89	4.84	4.84	4.73	6.18
6"	5.78	6.00	1.18	3.14	6.26	6.26	8.37	6.02	6.02	6.33	8.52

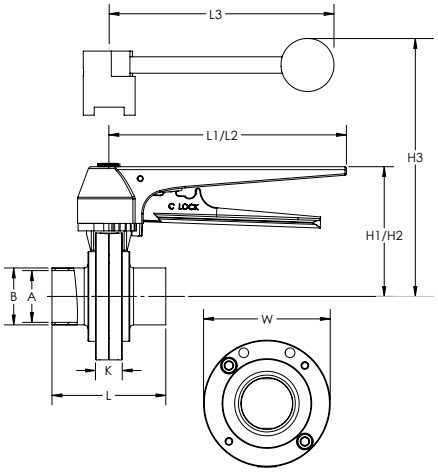

HX BUTTERFLY VALVE DISC & STEM DIMENSIONS

SIZE	K	ØA	ØB	C	ØD
1/2"	0.31	0.89	0.46	0.85	0.46
3/4"	0.31	0.89	0.46	0.85	0.46
1"	0.31	0.89	0.46	0.85	0.46
1-1/2"	0.31	1.42	0.46	0.85	0.46
2"	0.31	1.97	0.46	0.85	0.46
2-1/2"	0.31	2.36	0.46	0.85	0.46
3"	0.31	2.78	0.46	0.85	0.46
4"	0.47	3.92	0.63	0.83	0.63
6"	0.63	5.74	0.76	0.85	0.76

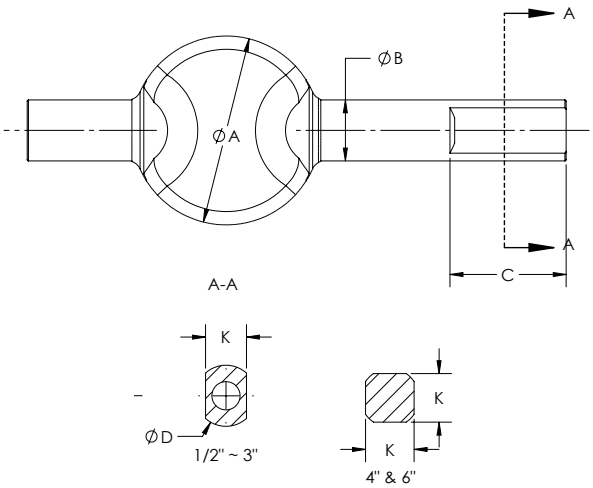

ITEM	DESCRIPTION	MATERIAL
01	Valve Body	304/316L
02	Seat	Silicone / EPDM / FKM
03	Disc	304 / 316L
04	Bushing*	Plastic
05	Nut**	304
06	Bolt	304
07	Handle Plate	304
08	Handle	Plastic / 304
09	Plastic Plug	Plastic
10	Bolt	304
11	Body Cap	Buna

* 4" Valve Only
** 6" Valve Only

BUTTERFLY VALVE REPLACEMENT SEATS

SIZE	EPDM (BLACK)	SILICONE (RED)	FKM (BROWN)
1/2"	WBFVHX-ST-E-.50	WBFVHX-ST-S-.50	WBFVHX-ST-V-.50
3/4"	WBFVHX-ST-E-.75	WBFVHX-ST-S-.75	WBFVHX-ST-V-.75
1"	WBFVHX-ST-E-1	WBFVHX-ST-S-1	WBFVHX-ST-V-1
1-1/2"	WBFVHX-ST-E-15	WBFVHX-ST-S-15	WBFVHX-ST-V-15
2"	WBFVHX-ST-E-2	WBFVHX-ST-S-2	WBFVHX-ST-V-2
2-1/2"	WBFVHX-ST-E-25	WBFVHX-ST-S-25	WBFVHX-ST-V-25
3"	WBFVHX-ST-E-3	WBFVHX-ST-S-3	WBFVHX-ST-V-3
4"	WBFVHX-ST-E-4	WBFVHX-ST-S-4	WBFVHX-ST-V-4
6"	WBFVHX-ST-E-6	WBFVHX-ST-S-6	WBFVHX-ST-V-6

BUTTERFLY VALVE HANDLE REPLACEMENTS

SIZE	304 STAINLESS 12-POSITION TRIGGER HANDLE	BLACK PLASTIC 12-POSITION TRIGGER HANDLE	4 POSITION PULL HANDLE
1/2"	WBFVHX-TS-.50-3	WBFVHX-TP-.50-3	WBFVHX-PH-.50-3
3/4"			
1"			
1-1/2"			
2"			
2-1/2"			
3"			
4"	WBFVHX-TS-4	WBFVHX-TP-4	WBFVHX-PH-4
6"	WBFVHX-TS-6	WBFVHX-TP-6	WBFVHX-PH-6

WAYLAND

ACTUATED BUTTERFLY VALVES
(HX SERIES)

FEATURES:

	Actuator	Valve Body
• Material:	T304 Stainless Steel	T304 or T316L

- Field Serviceable
- All wetted surfaces are ≤ 25R_a
- Air Supply Pressure: 72 – 102 PSI
- Weight (actuator only): 1/2"- 3" = 7.72 lbs.
  4" = 15.43 lbs.
- Air Fitting Ports: 1/8" FNPT tap
- Air Hose Size: 1/4"
- Can be mounted on 1/2" through 4" butterfly valves
- Available in "Normally Open" , "Normally Closed" & "Double Acting" actuation

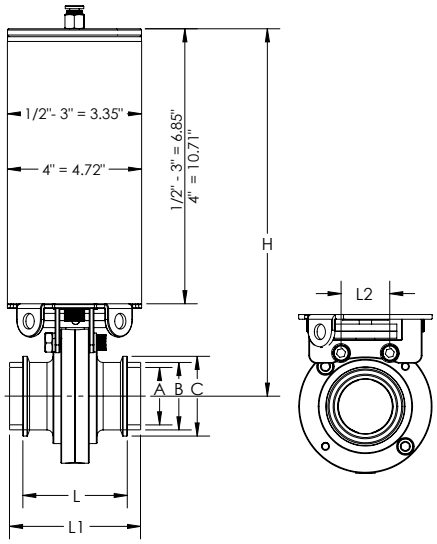

ACTUATED BUTTERFLY VALVES

	DIMENSIONS							PART NUMBERS*		
SIZE	A	B	C	L	L1	L2	H	SPRING RETURN OPEN	SPRING RETURN CLOSED	DUAL ACTING
1/2"	0.37	0.50	0.99	2.68	2.68	1.22	9.00	W6BFVHXTC-E-.50-SRO	W6BFVHXTC-E-.50-SRC	W6BFVHXTC-E-.50-DA
3/4"	0.62	0.75	0.99	2.68	2.68	1.22	9.00	W6BFVHXTC-E-.75-SRO	W6BFVHXTC-E-.75-SRC	W6BFVHXTC-E-.75-DA
1"	0.87	1.00	1.99	2.60	2.68	1.22	9.00	W6BFVHXTC-E-1-SRO	W6BFVHXTC-E-1-SRC	W6BFVHXTC-E-1-DA
1-1/2"	1.37	1.50	1.99	2.60	3.00	1.22	9.12	W6BFVHXTC-E-15-SRO	W6BFVHXTC-E-15-SRC	W6BFVHXTC-E-15-DA
2"	1.87	2.00	2.52	2.76	3.14	1.22	9.51	W6BFVHXTC-E-2-SRO	W6BFVHXTC-E-2-SRC	W6BFVHXTC-E-2-DA
2-1/2"	2.37	2.50	3.05	2.76	3.14	1.22	9.65	W6BFVHXTC-E-25-SRO	W6BFVHXTC-E-25-SRC	W6BFVHXTC-E-25-DA
3"	2.87	3.00	3.58	3.00	3.22	1.22	9.91	W6BFVHXTC-E-3-SRO	W6BFVHXTC-E-3-SRC	W6BFVHXTC-E-3-DA
4"	3.83	4.00	4.69	3.00	3.46	1.22	15.49	W6BFVHXTC-E-4-SRO	W6BFVHXTC-E-4-SRC	W6BFVHXTC-E-4-DA

* REPLACE E (EPDM) WITH S (SILICONE) OR V (FKM) FOR SEAT PREFERENCE
* REPLACE W6 (316L) WITH W4 (304) FOR ALLOY PREFERENCE
* REPLACE TC (TRI CLAMP) WITH BW (BUTT WELD) FOR END PREFERENCE

INDIVIDUAL VERTICAL CANISTER ACTUATOR PART NUMBERS

Size	SPRING RETURN	DUAL ACTING
1/2" - 3"	VC3-SR	VC3-DA
4"	VC101-SR	VC101-DA

PROXIMITY SENSOR KIT

PART NUMBER
PROXVC3 (1/2"-3")
PROXV101 (4")

Kit contains:
Proximity Sensor (1)
Indicator (1)
Serrated Washers (2)
Mounting nuts (2)

Operating Voltage: 12 to 30 VDC